ARC-21W39

21.5" Intel® Processor N97/ X7433RE /N150
Fanless Rugged Touch Panel PC with IET Expansion

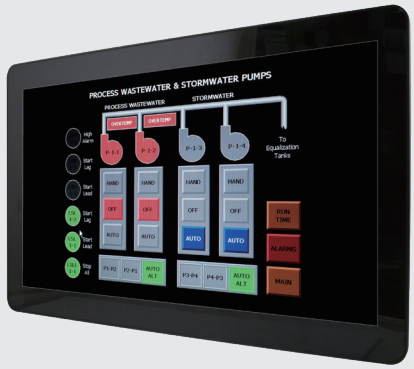

Features

- 21.5" FHD LCD with PCAP multi-touch
- Intel® Processor N97/ X7433RE /N150 (Option Core i3-N305/ i3-N355)
- Full flat front panel with projected capacitive touch supports multi touch
- 1 x 204-pin DDR5 SODIMM socket, supports up to 32GB 4800MHz Max (non ECC only)
- Rich I/Os, 2 LAN, 2 COM, 2 USB, 1 USB Type C, SIM card slot, swappable drive bay, speaker out for flexible expansion modules
- Rugged design for vibration & shock protection
- Fanless operation from -10 ~ 50°C
- Wide range DC power input from +12 ~ 24Vdc
- Service window, easy to install memory module

+12V ~ +24V | PCAP | Fanless | Wide Temp. -10°C ~ 50°C | Front IP65 Rear IP41

Specifications

System Information	
Processor	Intel® Alder Lake-N N97, 6M Cache, up to 3.6 GHz, 12W Intel® Amston Lake X7433RE, 6M Cache, up to 3.40 GHz, 9W Intel® Twin Lake N150, 6M Cache, 0.8 GHz up to 3.60 GHz, 6W
System Memory	1 x 262-pin DDR5 4800MHz SO-DIMM socket, supports up to 32GB Max (non ECC only)
Watchdog Timer	H/W reset, 1sec. ~ 65535sec./1sec.step
H/W Status Monitor	Monitoring CPU & system temperature and voltage
SBC	ARC-ASL
CPU Cooler (Type)	Fanless heatsink
Other	3 x Knockouts for antenna mounting
Expansion	
Expansion	1 x M.2 (Key-B, 2242/3042/3052, SATAIII, USB3.2 Gen1x1 (default, 5Gbp/s)) or PCIex1 (via OEM BIOS request), USB2.0, SIM Slot for LTE Cards (*Not support PCIex2 device) 1 x M.2 (Key-E, 2230, PCIex1, USB2.0) 1 x optional by IET module
Storage	
Storage	1 x 2.5 Drive bay (7mm HDD restricted)
HDD/ SSD	1 x SATA3
Other Storage Device	1 x M.2 Key-B 2242/3042/3052 for M.2 SATAIII SSD by default
Audio	
Audio Codec	Realtek ALC888S
Speaker Output	2 x 2W
Ethernet	
LAN Chipset	2 x Intel® I226LM 2.5 Gigabit Ethernet
Ethernet Interface	10/100/1000/2.5G Base-Tx GbE compatible
Power Requirement	
DC Input	+12V ~ +24V
DC Input Connector	Lockable DC Jack (default) Optional for phoenix connector
ACPI	Single power ATX support S0, S3, S4, S5 and ACPI 3.0 compliant
Software Support	
OS	Win 10/ Win11 / Linux
Certification	
Certification Information	CE / FCC Class A
Panel	
LCD Size	21.5", 16:9
Display Type	FHD
Resolution	1920 x 1080
Pixel Pitch	247.95um (H) x 247.95um (V)
Luminance	500 cd/m²
Contrast Ratio	1000
Viewing Angle	89 (U), 89 (D), 89 (L), 89 (R)
Response Time	14 ms
Backlight	LED
Touch Type	Projective capacitive multi-touch up to 10 points
Touch Light Transmission	89%
Touch Controller	USB touch (EETI)
External I/O	
USB Port	2 x USB3.2 (1 x double deck, type A) 1 x USB type C (w/ PD (20V/3A input), USB3.2 (Gen2x1, 10Gbps, 5V/3A output), display function)
LAN Port	2 x RJ-45
COM Port	1 x RS-232/422/485, 1 x RS-232
External I/O	
Expansion	1 x M.2 (Key-B, 2242/3042/3052, SATAIII, USB3.2 Gen1x1 (default, 5Gbp/s)) or PCIex1 (via OEM BIOS request), USB2.0, SIM slot for LTE cards (*Not support PCIex2 device) 1 x M.2 (Key-E, 2230, PCIex1, USB2.0) 1 x 80-pin IET interface
DIO	12-bit GPIO + 2-pin CAN bus (by ARC-BYT DB-E)
Other	3 x Knockouts for antenna mounting
System Control	
LED Indicator	HDD LED, power LED
Mechanical & Environmental	
Operating Temp.	-10°C ~ 50°C (14°F ~ 122°F)
Storage Temp.	-20°C ~ 60°C (-4°F ~ 140°F)
Operating Humidity	40°C @ 95% Relative humidity, non-condensing
Dimension (W x L x H)	538.05 x 341.05 x 60.05mm
Weight	7.3 Kg
Vibration Test	With SSD/mSATA : 1.5Grms, IEC 60068-2-64, random, 5 ~ 500Hz, 1hr/axis
Shock Test	Operating with SSD/CFast/mSATA : MIL-STD-810G, method 516.6, procedure I, functional shock=20G
Drop Test	ISTA 2A, IEC-60068-2-32 Test:Ed
IP Rating	Front panel IP65, Back cover IP41
Mounting Kit	Wall / Stand / VESA 75mm x 75mm, 100mm x 100mm Panel mount with mounting kits
Power Mode	AT/ATX (ATX is default)
System Fan	Fanless
Construction - Front	Die casting with cover lens
Construction - Rear	Black die casting
Component	
Adapter	Input: 100 ~ 240Vac/ 50 ~ 60Hz Output: 72W adapter (19V @ 3.78A adapter) AC-DC adapter

ARC-21W39

21.5" Intel® Processor N97/ X7433RE /N150
Fanless Rugged Touch Panel PC with IET Expansion

Mechanical Drawing

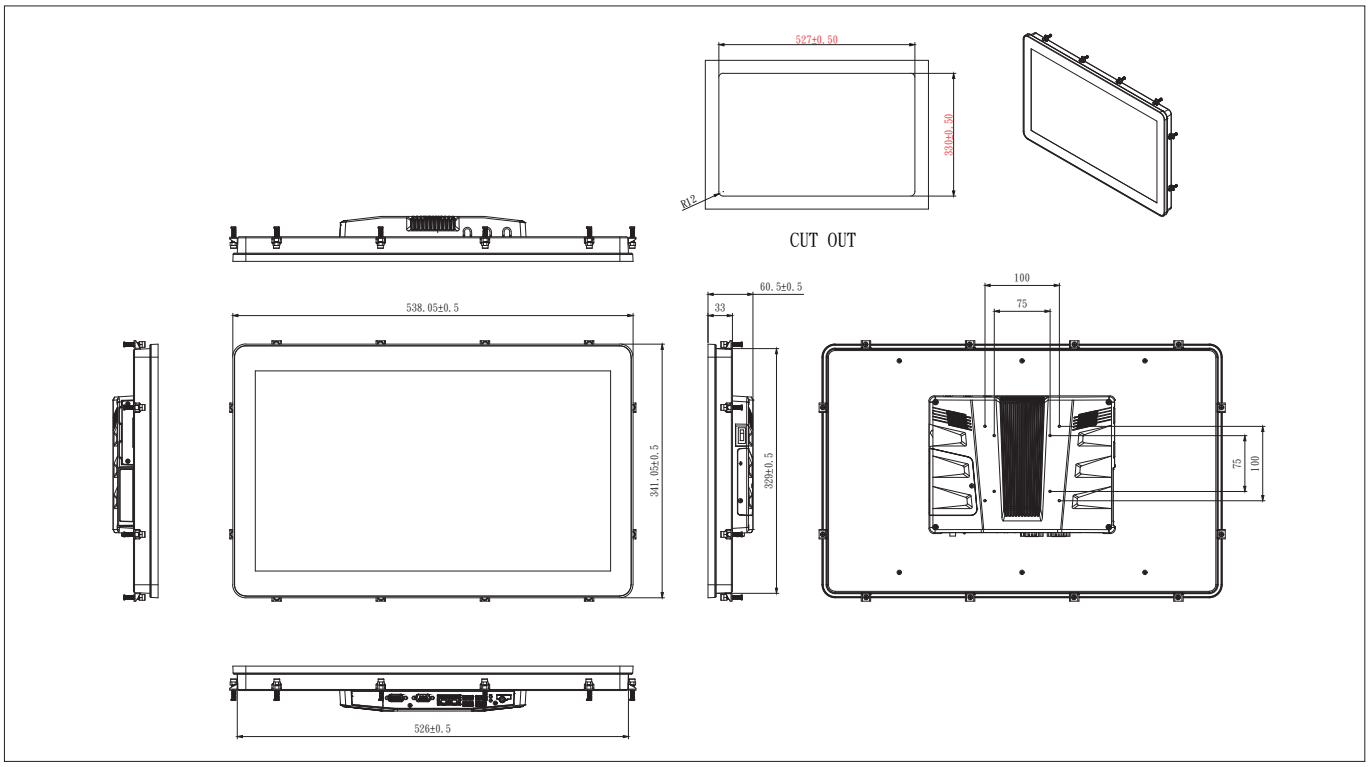

Ordering Information

P/N	Touch Type	Processor	Memory	Storage	Resolution	Luminance	COM	USB	LAN	Power Input	Operating Temp.	OS Support
ARC-21W39-150-B1R	PCAP	N150	262-pin DDR5 4800MHz SO-DIMM	1 x 2.5" Drive bay (7mm HDD restricted)	1920 x 1080	500	2	3	2	+12V ~ +24V	-10°C ~ 50°C	Win10 / Win11 / Linux
ARC-21W39-355-B1R	PCAP	i3-N355	262-pin DDR5 4800MHz SO-DIMM	1 x 2.5" Drive bay (7mm HDD restricted)	1920 x 1080	500	2	3	2	+12V ~ +24V	-10°C ~ 50°C	Win10 / Win11 / Linux

Packing List

Item	P/N	Quantity
AC/DC adapter 19V/3.78A Screw Type	ACC-ADP-072N-02R	1
HDD shockproof Rubber	ACC-RUBBER-0001R	4
M4 x 6mm Screw for VESA	ACC-SCREW-0002R	4
M3 x 8mm Screw for HDD	ACC-SCREW-0005R	4
Screw-Round M4 x 25mm	E1935052510R	12
Bracket for Panel Mount SECC	E195BKAR120915R	12
Plastics spacer support D7.7 x 8	E199PS00002R	12

Optional Items

Item	P/N
4 x USB 3.0 Kit for ARC Series	ACC-ARC-USB-1R
HDMI + 5.1 CH Audio Kit for ARC Series	ACC-ARC-AUDIO-1R
HDMI + MPCIE w/SIM Kit for ARC Series	ACC-ARC-MPCIE-1R
2 x Isolated RS-232 Kit for ARC Series	ACC-ARC-COM-1R
3 x RS-232 Kit for ARC Series	ACC-ARC-COM-2R
2 x RS-232 + USB Kit for ARC Series	ACC-ARC-COM-3R
2 x RS-232 + LAN Kit for ARC Series	ACC-ARC-COM-4R
12-bit GPIO + 2-pin CAN Bus Kit for ARC Series	ACC-ARC-GPIO-1R
OBDII - CAN Bus Kit for ARC Series (OBDII/EOBD for Small Vehicle)	ACC-ARC-OBDII-1R
OBDII - CAN Bus Kit for ARC Series (J1939J1708 for Large Vehicle)	ACC-ARC-OBDII-2R
OBDII - CAN Bus Kit for ARC Series (ISO15765-4 for Special Large Vehicle)	ACC-ARC-OBDII-3R
2xHDMI output + USB2.0 for ARC Series	AUX-080-HDMI-A1R
LAN + Mini PCIe + SIM for ARC Series	AUX-086-LAN-A1R
USA Power Cord	E1702031835R
EU Power Cord	E170203183DR
Japan Power Cord	E170203183BR
UK Power Cord	E170203183ER
Australia Power Cord	E1702031800R

I/O Overview

