MAB-T660D

MAB-T660D AI PC DC Jack – Compact Size
for Space-Constrained Medical Devices



Features

- Compact and half in size easy for space-constraint scenarios
- Lockable DC jack to ensure secure power connection in critical medical environments
- High performance supported by 12/13/14th Generation Intel® Core™ i3/i5/i7/i9 Processors
- Half-height PCIe slot (1x PCIe x16 via riser card) for flexible expansions
- Support 2 high-resolution displays by 1 x DP++, 1 x HDMI 1.4b
- Instant data transmission by 1 x Intel 2.5 GbE LAN and 1 x Intel GbE LAN ports
- Up to 8 USB ports (USB 3.2 Gen1 incl.) for versatile peripheral integration

External Adapter | Slim Design | Rizer Card Expansion | Smart Fan Control

Specifications

System Information	
Processor	12th Gen Alder Lake/ 13th Gen Raptor Lake/ 14th Gen Raptor Lake Refresh Intel® Core™ i3/i5/i7/i9 Processors. Max TDP 65W
Platform Controller Hub	Intel® H610E Chipset
System Memory	2 x SODIMM sockets support DDR5 5600MHz up to 64GB (Non-ECC)(CPU dependent)
I/O Chipset	Nuvoton NCT6126D (eSPI super IO)
BIOS	AMI uEFI BIOS, 256Mbit SPI Flash ROM
Watchdog Timer	H/W Reset, 5~255 seconds/5~255 minutes
H/W Status Monitor	CPU temperature monitoring, Voltages monitoring, CPU fan speed control
TPM	dTPM2.0
iAMT	Yes
SBC	MX610HD
Expansion	
M.2	1 x M.2 M-Key 2242/2280 NVMe (PCIe x4 + SATA III) 1 x M.2 E-Key 2230 CNVi (PCIe x1 + USB 2.0)
PCIe	1 x Gen 4 PCIe x16
Storage	
M.2	1 x M.2 Key-M 2242/2280 NVMe (PCIex4, SATA3)
Storage	1 x Internal 2.5"Drive Bay
Front I/O	
Power Button	1 x PWR Button
LED Indicator	1 x Power on/off LED
USB	2 x USB 2.0
Rear I/O	
USB	2 x USB 2.0 (Type A), 2 x USB 3.2 (Type A) 1 x Internal USB 3.2 Gen 1x1 Header (2 Ports)
LAN Port	2 x RJ45
Audio	Line-out, Mic-in
DP	1 x DP
HDMI	1 x HDMI
AC/DC Input	DC-In

Display	
Graphic Chipset	Intel® Integrated UHD Graphic with Xe Architecture (CPU Dependent)
Spec. & Resolution	1 x DP 1.4a 4096 x 2304@60Hz 1 x HDMI 1.4b 3840 x 2160 @30Hz
Audio	
Audio Codec	Realtek HD Audio Codec
Audio Amplifier	TI TPA3005 Stereo Class-D 3W4Ω
Power Requirement	
Voltage Input Spec	12V-24V Wide Range DC-In
Voltage Input Conn.	4-pin DC Jack
ACPI	Single power ATX support S0, S3, S4, S5
Power Mode	AT / ATX mode (Default ATX)
Adapter	External 180W adapter (Optional medical 180W adapter)
Ethernet	
LAN Chipset	1 x Intel® i225LM 2.5 Gigabit Controller 1 x Intel® I219-V Gigabit Ethernet PHY
Data Rate Per Port	2.5GbE (I225-LM) 1GbE (I219-V)
Software Support	
OS	Win 10, Win 11, Linux
Certification	
Certification Information	ITE CE/FCC
Mechanical & Environmental	
Operating Temp.	0°C ~ 40°C (32°F ~ 104°F) with 0.5m/s air flow (turbo mode off)
Drop Test	Package drop test:One corner, three edges, six faces ISTA 2A, IEC-60068-2-32
Shock Test	With SSD : 10 Grms, IEC 60068-2-27, half sine, 11ms
Vibration Test	Operating with SSD : 0.5 Grms, IEC 60068-2-64, 5 ~ 500Hz, 0.5hr/axis
Weight	4.8 kg
Dimension (W x L x H)	315 x 273 x 92 mm
Operating Humidity	40°C @ 95% Relative Humidity, Non-condensing
Storage Temp.	-20°C ~ 60°C (-4°F ~ 140°F)

MAB-T660D

MAB-T660D AI PC DC Jack – Compact Size
for Space-Constrained Medical Devices

Mechanical Drawing

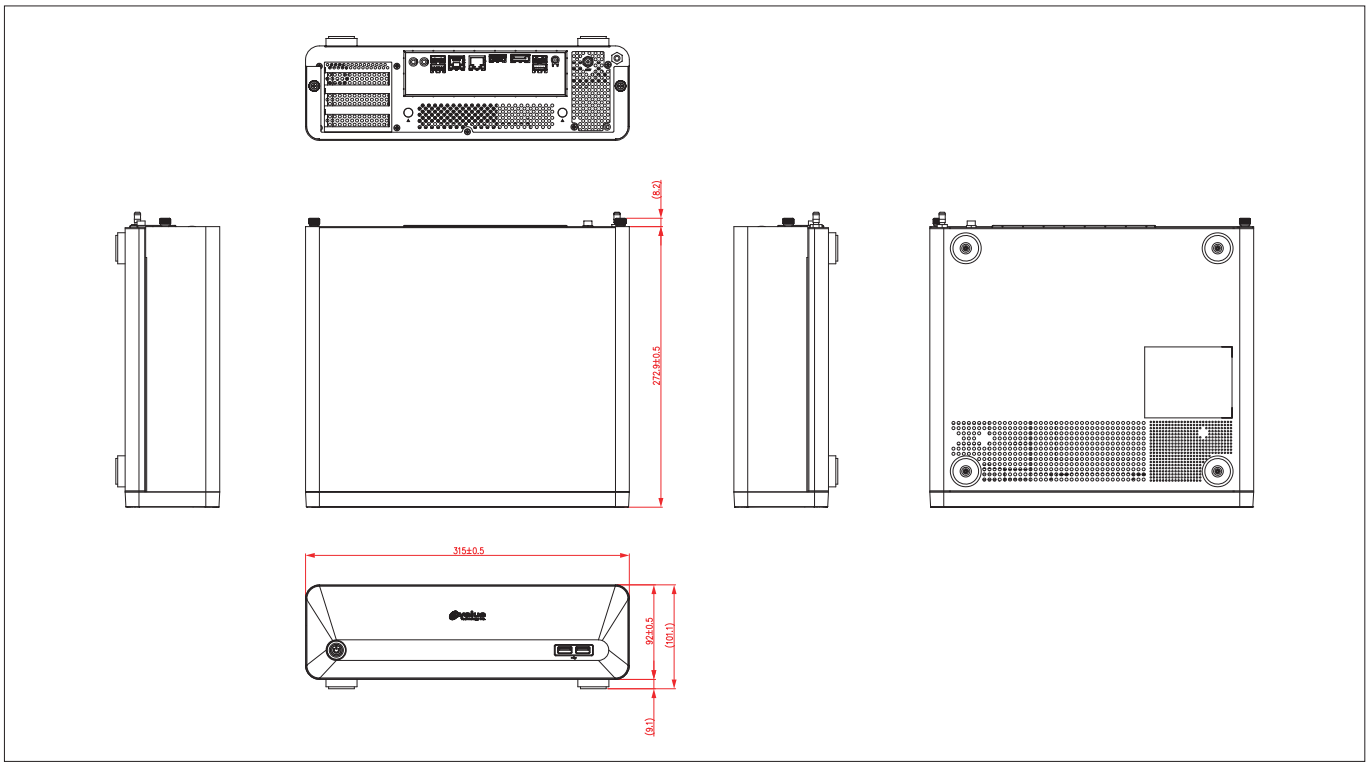

Ordering Information

P/N	Processor	Memory	Storage	Video Out	USB	LAN	Power Input	Working Temp.
MAB-T660D-A1-1R	LGA 1700 socket supports 12th Gen Alder Lake/ 13th Gen Raptor Lake/ 14th Gen Raptor Lake Refresh Intel® Core™ i3/i5/i7/i9 Processors (max TDP 65W)	2 x SODIMM sockets support Dual Channel DDR5 memory speed up to 5600MHz, up to 64GB (CPU Dependent)	1 x 2.5" SATAIII SSD drive	1 x DP 1 x HDMI	2 x USB 2.0 (front I/O) 2 x USB 3.2 Type A 2 x USB 2.0 Type A	2	DC in	0°C ~ 40°C

Packing List

Item	P/N	Quantity
AC/DC Adapter	ACC-ADP-180N-02R	1
CPU cooler 0.84A/12V/Fan 91 x 87.5 x 64.6mm	ACC-FAN-170-02R	1
Screw kits		1

Optional Items

Item	P/N
NVIDIA A1000	RCC-GPU-RTXADA-04R
NVIDIA RTX2000E ADA	RCC-GPU-RTXLL-01R
SC710N1-L 12G-SDI+HDMI2.0 Capture Card	RCC-CAP-PCIE-04R
SC400N2-L HDMI Capture Card	RCC-CAP-PCIE-04R
Intel 82574 LAN Card	RCC-LAN-PCIE-01R
Intel I350AM2 LAN Card	RCC-LAN-PCIE-02R
Intel I210 PoE Card	RCC-POE-PCIE-03R
Intel WIFI 6E module with kits	RCC-WIFI-M2BT-02R
WiFI 6E set ENL-5400PCI PCIe Adapter	RCC-WIFI-PCIE-01R
EU Power Cord	E1702031000R
US Power Cord	E1702031833R
JP Power Cord	E1702031834R
UK Power Cord	E170P060380R
AU Power Cord	E1702031831R
CN Power Cord	E170P060391R

MAB-T660D

MAB-T660D AI PC DC Jack – Compact Size
for Space-Constrained Medical Devices

I/O Overview

