APC-15WR2

15.6" Applied Panel PC with Rockchip RK3568



Features

- 15.6" 1920 x 1080 Applied Panel PC with PCAP touch
- Rockchip RK3568 Arm Quad Cortex-A55, up to 2.0GHz
- 4GB LPDDR4 / 64GB eMMC
- Full color LED indicating light bar
- Fanless operation from 0°C ~ 40°C
- Wide voltage input DC 12~24V and support Powered LAN (802.3at)
- Antibacterial Enclosure

Handset Ready | LED Indicator For Alarms | Quick ID Identification | Slim Design | Antibacterial Enclosure

Specifications

System Information	
Processor	Rockchip RK3568 Arm Quad Cortex-A55, up to 2.0GHz
System Memory	4GB LPDDR4
Storage	
Storage	64GB eMMC
Other Storage Device	1 x Micro SD
Display	
Graphic Chipset	Mali-G52 support OpenGL ES 1.1/2.0/3.2, Vulkan 1.0/1.1, OpenCL 2.0
Audio	
Speaker Output	2 x 4Ω 2.0W/2.2W(MAX)
Ethernet	
LAN Chipset	Realtek RTL8211F-CG
Ethernet Interface	10/100/1000 Base-Tx GbE compatible
Power Requirement	
DC Input	+12V ~ +24V
DC Input Connector	Lockable DC Jack
Software Support	
OS	Android 11,14 / Debian 11
Certification	
Certification Information	CE, FCC Class B
Panel	
LCD Size	15.6"
LCD Panel	TFT
Resolution	1920 x 1080
Pixel Pitch	0.17925 (H) x 0.17925 (V) mm
Luminance	400 cd/m^2
Contrast Ratio	800
Viewing Angle	85 (U), 85 (D), 85 (L), 85 (R)
Response Time	30 ms
Backlight	LED
Touch Type	Projective capacitive multi-touch up to 10 points
Touch Light Transmission	85%

External I/O	
USB Port	2 x USB 3.0
LAN Port	1 x RJ45
COM Port	1 x RS-232/485 (RJ45)
DC Input	1 x DC Jack
Other	1 x Power On/Off Touch key
Internal I/O	
Expansion	1 x M.2 Key B (3042, SATA3 / USB 2.0, support SSD/LTE Module)
SIM Slot	1 x Micro SIM Slot
System Control	
LED Indicator	2 x Full color light bar
Data Collection	
NFC	Support NFCIP-1, NFCIP-2, ISO/IEC 14443, ISO/IEC 15693, MIFARE and FeliCa
Camera	1 x 2.0MP Camera
Wireless Communication	
WLAN	Optional Wi-Fi 802.11ac/a/b/g/n
Bluetooth	Optional BT 5.0
Mechanical & Environmental	
Operating Temp.	0°C ~ 40°C (32°F ~ 104°F)
Storage Temp.	-10°C ~ 60°C (14°F ~ 140°F)
Operating Humidity	40°C @ 95% Relative Humidity, Non-condensing
Dimension (W x L x H)	385 x 266 x 34 mm
Weight	2.5 kg
IP Rating	Front panel IP65
VESA	75 x 75
Power Requirement	DC 12~24V/Powered LAN (802.3at)
Power Mode	AT
System Fan	Fanless
Color	White
Construction	Plastic PC + ABS with Antibacterial Enclosure
Component	
Adapter	Optional Input: 100 ~ 240Vac/ 50 ~ 60Hz Output: 60W adapter (12V @ 5A adapter) AC-DC adapter

APC-15WR2

15.6" Applied Panel PC with Rockchip RK3568

Mechanical Drawing

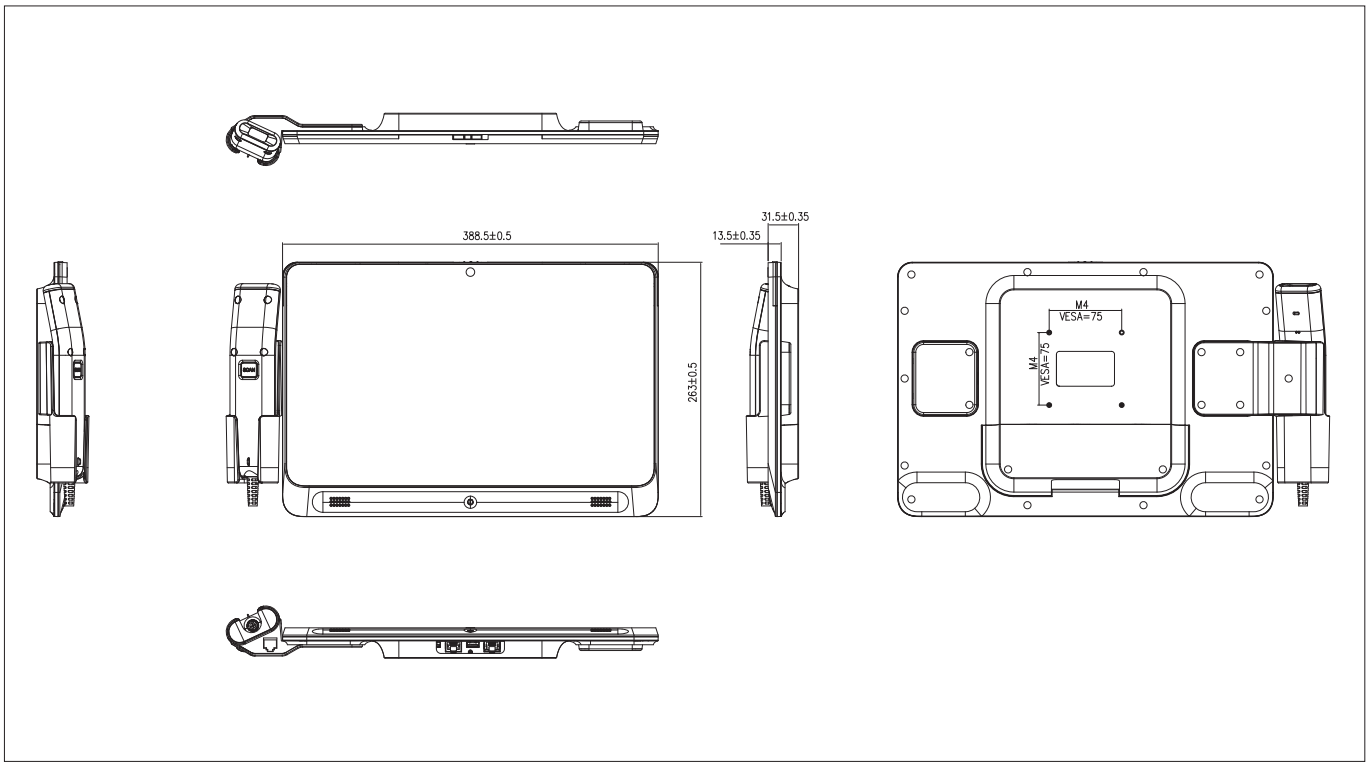

Ordering Information

P/N	Touch Type	Processor	Memory	Storage	Panel Size	Resolution	Brightness	I/O Ports (COM/USB/LAN)	Power Input	Working Temp.	OS Support	Handset
APC-15WR2-CW49-1R	PCAP	Rockchip RK3568	4GB LPDDR4	64GB eMMC	15.6"	1920 x 1080	400	1/2/1	DC 12 ~ 24V	0°C ~ 40°C (32°F ~ 104°F)	Android 11	-
APC-15WR2-CW49H-1R	PCAP	Rockchip RK3568	4GB LPDDR4	64GB eMMC	15.6"	1920 x 1080	400	1/2/1	DC 12 ~ 24V	0°C ~ 40°C (32°F ~ 104°F)	Android 11	Yes

Packing List

Item	P/N	Quantity
APC-15WR2 Panel PC	APC-15WR2-CW49-1R	1

Optional Items

Item	P/N
AC/DC adapter 12V/5A 90 Screw Type	ACC-ADP-060N-08R
3P (F)-3P (M) 183cm USA 3 Blades Black	E1702031833R
3P (F)-2P (M) 183cm EUROPE 2	E1702031000R
3P (F)-3P (M) 183cm USA 3 Blads PSE	E1702031834R
UK Power Cord QP-026+SL-3 (UKCA) 1.8M	E170P060380R

I/O Overview

