ECM-ASL3

Intel® Processor N97, Intel® Core™ i3-N305 Processor &
Intel Atom® x7000RE series 3.5"Micro Module

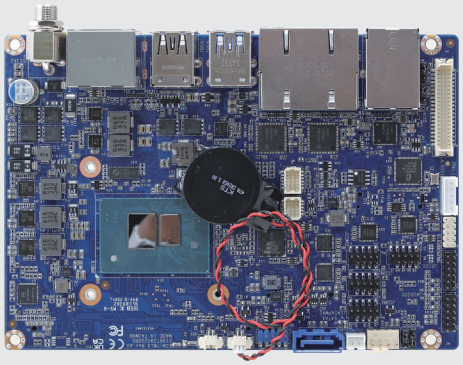

Features

- Onboard Intel® Processor N97, and Intel® Core™ i3-N305 Processor, Intel Atom® x7000RE series processors
- Top Layer Soldered Processor
- Triple Display, DP 1.4a, HDMI 2.0b, 1 x 2CH LVDS/eDP
- 2 x Intel® I210AT/IT Gigabit Ethernet, 1 x Intel® I226V/IT 2.5 Gigabit Ethernet
- Triple Expansion Slot, M.2 Key-B, M.2 Key-E, M.2 Key-M
- DC in +9V ~ +36V

HDMI | DP++ | DDR5 SO-DIMM | USB 3.2 | RS232/422/485

Specifications

System Information	
Processor	Intel® Processor N-series, BGA 1264 Intel® Processor N97, 4CT, 6MB, GHz (3.6GHz), TDP up to 12W Intel® Core™ Processor N-series, BGA 1264 Intel® Core™ i3-N305 Processor, 8C8T, 6MB, GHz (3.8GHz), TDP up to 15W Intel Atom® Processor X Series, BGA 1264 Intel Atom® x7433RE Processor, 4CT, 6MB, GHz (3.4GHz), TDP up to 9W Intel Atom® x7835RE Processor, 8CT, 6MB, GHz (3.6GHz), TDP up to 12W Intel Atom® x7213RE Processor , 2CT, 6MB, GHz (3.4GHz), TDP up to 9W
System Memory	1 x 262-pin DDR5 4800MHz SO-DIMM socket, supports up to 16GB Max.
I/O Chipset	EC iTE IT5782VG
Watchdog Timer	H/W Reset, 1sec. ~ 65535sec and 1sec. or 1min./step
BIOS	AMI BIOS, 256Mbit SPI Flash ROM
H/W Status Monitor	CPU temperature monitoring Voltages monitoring CPU fan speed control
TPM	Onboard NuvoTon_NPCT760AABYX, co-lay Infineon_SLB9670VQ2.0
Board	3.5"
Expansion	
Expansion	1 x M.2 Key B 3042/3052, BOM Optional PCIe x 1 or USB3.2 Gen1 + USB2.0 (default USB3.2), support 5G (3.3V & 3.8V), 1 x SIM card slot, support WWAN+GNSS or SSD 1 x M.2 Key E 2230 support WiFi (1 x PCIe x 1, USB2.0 Signal), CNVi; not support Twin Lake & Amston Lake, only support Alder Lake processor 1 x M.2 Key M 2280 (1 x PCIe Gen3 x1 / SATA auto detection)
Storage	
Storage	1 x M.2 (Key M, 2280) 1 x M.2 (Key B, 3042/3052) 1 x SATA III
Display	
Graphic Chipset	Intel® UHD Graphics
Spec. & Resolution	HDMI 2.0b Max resolution 4096 x 2160@60Hz DP 1.4 Max resolution 4096 x 2160@60Hz LVDS 1920 x 1080 Dual channel 18/24-bits or eDP 1920 x 1080@60Hz (2 Lanes)
Multiple Display	Triple Display
LVDS	1 x LVDS: 1920 x 1080 Dual channel 18/24-bits LVDS

Audio	
Audio Codec	Realtek ALC888S HD Audio Decoding Controller
Audio Interface	Line-out, Line-in, Mic-in
Ethernet	
LAN Chipset	2 x Intel® I210AT/IT 1 x Intel® I226V/IT
Ethernet Interface	10/100/1000/2.5G Base-Tx GbE compatible
LAN Port	3 x RJ-45
Power Requirement	
Power Mode	AT/ATX (Default Setting: AT)
Software Support	
OS	Windows 11, Linux
Certification	
Certification Information	CE, FCC, RoHS Compliant
I/O	
USB	3 x USB3.2 Gen2, 1 x USB2.0 at I/O 2 x USB2.0 by pin header
COM Port	2 x RS-232/RS422/RS485 2 x RS-232
SATA	1 x SATA III
DIO	1 x 8-bit GPIO
MIO	2 x 6 pin for eSPI 1 x SIM Card Slot
Mechanical & Environmental	
Operating Temp.	Standard Temperature: 0°C ~ 60°C (32°F ~ 140°F) with 0.5m/s Air Flow Extend Temperature: -40°C ~ 80°C (-40°F ~ 176°F) with 0.5m/s Air Flow for Wide Temp CPU SKU
Storage Temp.	-40°C ~ 85°C (-40°F ~ 185°F)
Operating Humidity	40°C @ 95% Relative Humidity, Non-condensing
Weight	0.44lbs (0.2kg)
Power Requirement	DC in +9V ~ +36V
Dimension (L x W)	5.7" x 4" (146mm x 101mm)

ECM-ASL3

Intel® Processor N97, Intel® Core™ i3-N305 Processor &
Intel Atom® x7000RE series 3.5"Micro Module

Mechanical Drawing

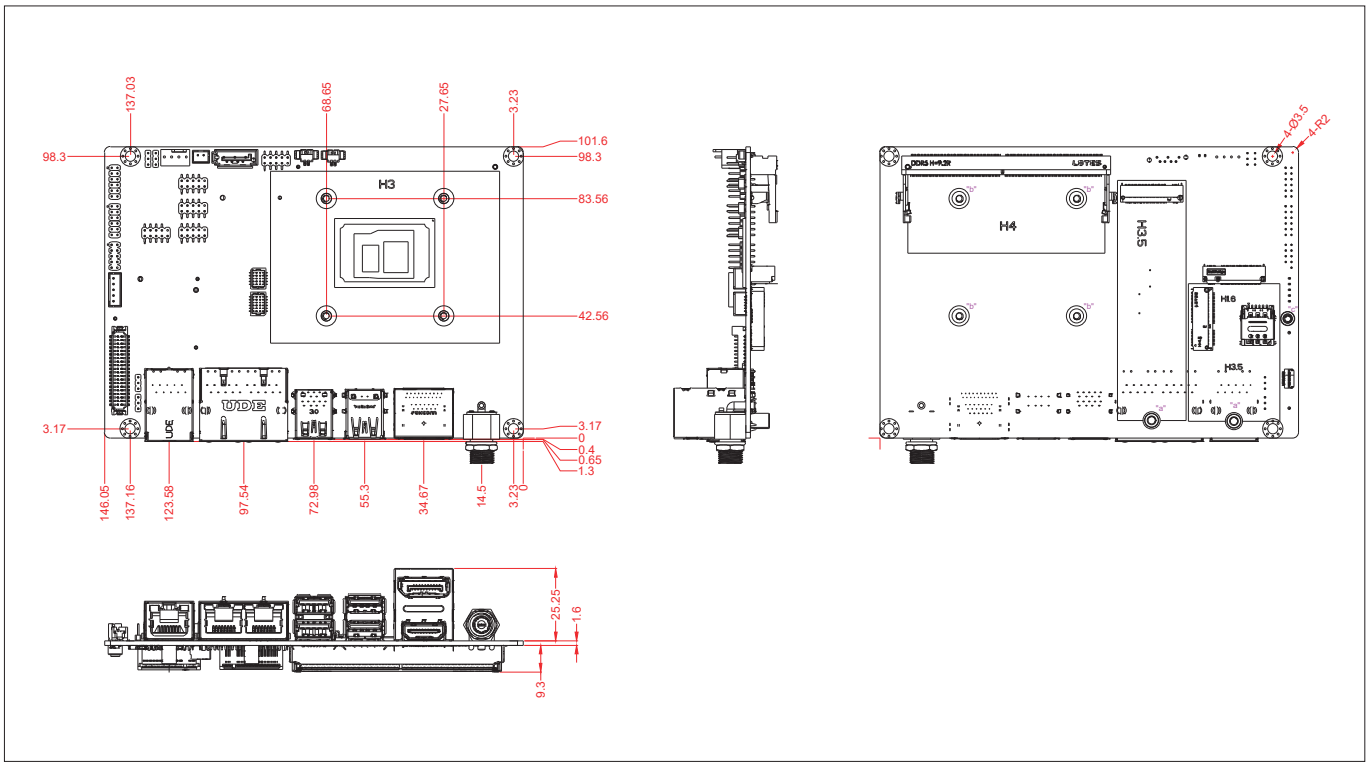

Ordering Information

P/N	Processor	Chipset	LAN	USB	COM	PCIe Slot	Power Input	Temp.	Note
ECM-ASL3-N97-A1R	Intel® Processor N97	NA	3	6	4	0	+9 ~ 36V DC	0°C ~ 60°C (32°F ~ 140°F)	NA
ECM-ASL3-N305-A1R	Intel® Core™ i3-N305 Processor	NA	3	6	4	0	+9 ~ 36V DC	0°C ~ 60°C (32°F ~ 140°F)	NA
ECM-ASL3-7433-A1R	Intel Atom® Processor x7433RE	NA	3	6	4	0	+9 ~ 36V DC	-40°C~ 80°C (-40°F ~ 176°F)	NA
ECM-ASL3-7835-A1R	Intel Atom® Processor x7835RE	NA	3	6	4	0	+9 ~ 36V DC	-40°C~ 80°C (-40°F ~ 176°F)	NA
ECM-ASL3-13S-A1R	Intel Atom® Processor x7213RE	N/A	3	6	4	0	+9 ~ 36V DC	0°C ~ 60°C (32°F ~ 140°F)	This model is sold in the standard temperature.

Packing List

Item	Quantity
Serial ATA cable (7-pin, standard)	1
Wire SATA power cable (15-pin,2P/2.0mm)	1
Flat cable 9P (M) - PHD 10P/2.0mm	1
CPU Heatsink	1
M.2 Module mounting bracket screw set	1

Block Diagram

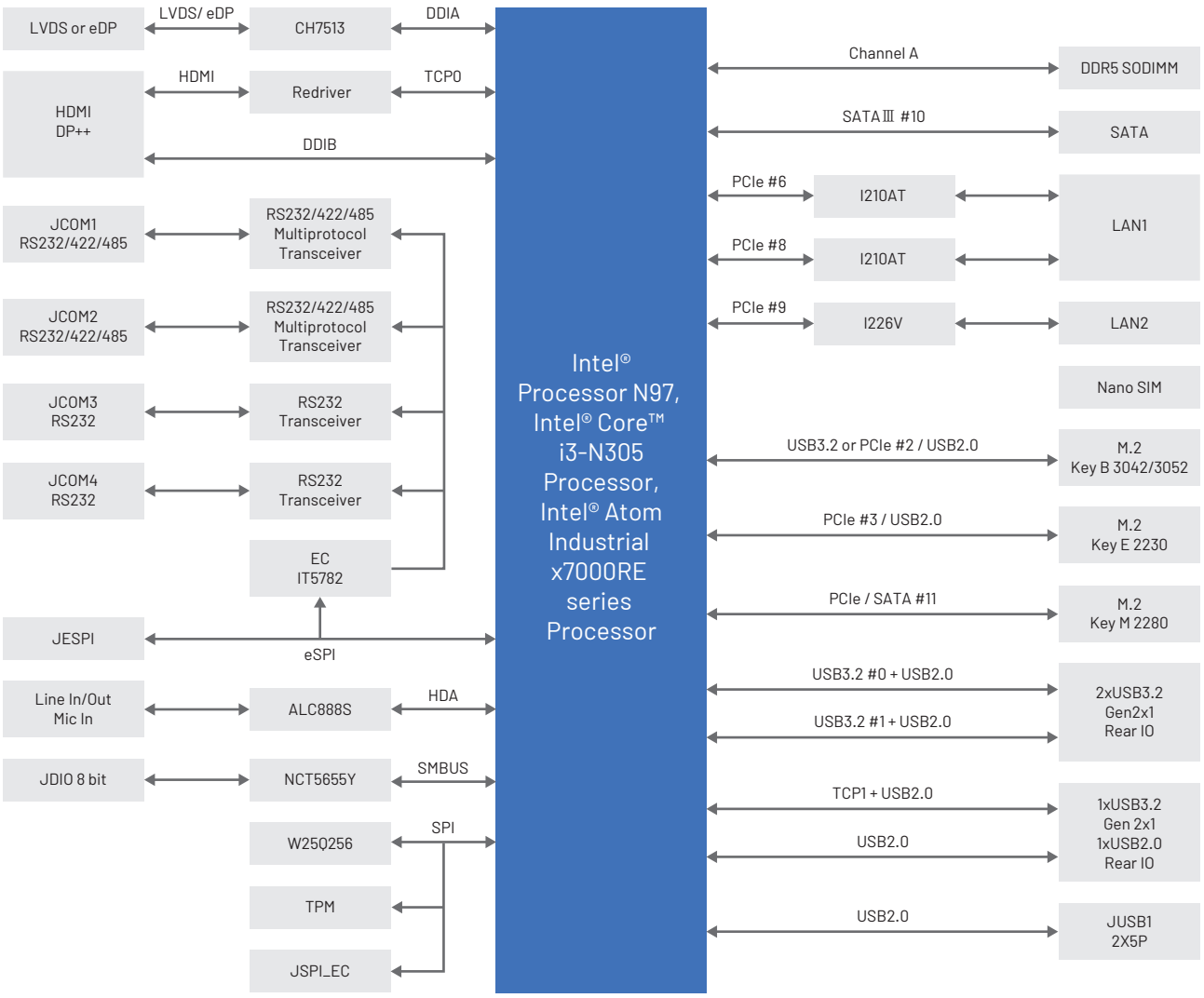

I/O Overview

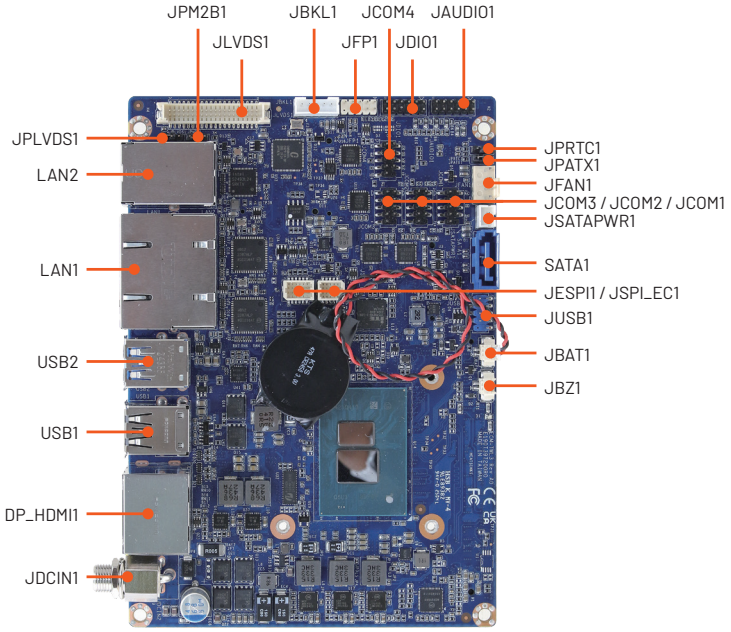
JPM2B1
JLVDS1
JBKL1
JCOM4
JAUDIO1
JFP1
JDIO1
JPLVDS1
LAN2
LAN1
USB2
USB1
DP_HDMI1
JDCIN1
JPRTC1
JPATX1
JFAN1
JCOM3 / JCOM2 / JCOM1
JSATAPWR1
SATA1
JESPI1 / JSPI_EC1
JUSB1
JBAT1
JBZ1

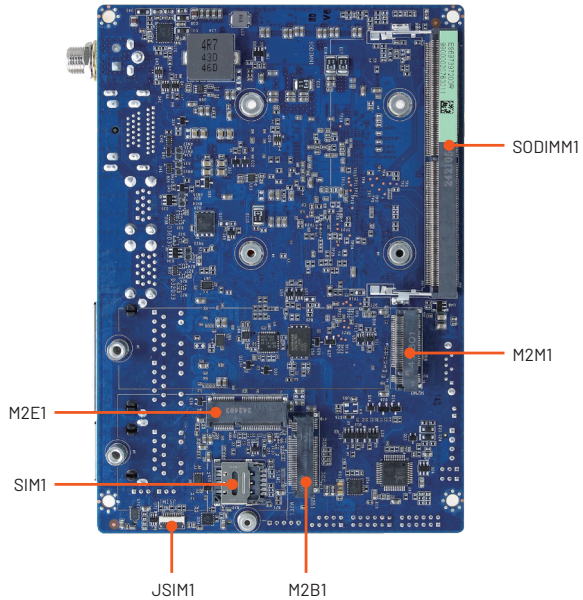
SODIMM1
M2M1
M2E1
SIM1
JSIM1
M2B1